Core 4.5″
Classic White Downlight

USAI® Lighting

Core 4.5 inch Classic White Downlight

Recessed downlights that are economically priced and competitive, Core 4.5 delivers beautiful white light in an efficient package while still achieving price targets for budget conscious projects.

- **Ideal Applications:** Medium to Large-Scaled Spaces
- **Recommended for Ceiling Height:** 14' – 20'
- **Light Type:** Consistent warm or neutral white, soft ambient light

Round Trimmed

Square Trimmed

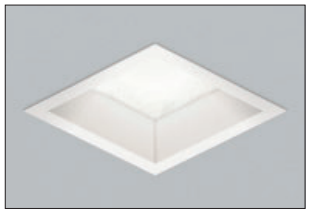

4.5″ DOWNLIGHT PERFORMANCE DATA

	Classic White	
Shape	**Round**	**Square**
Delivered Lumens:	1200	1300
Lumens Per Watt:	57	62
Source Lumens:	1675	
Wattage	22W	
CCT:	2700K or 3000K	
CRI:	90+	
Beamspread:	100° Wide Beam / Straight Down	

4′ SPACING BETWEEN LIGHT FIXTURES

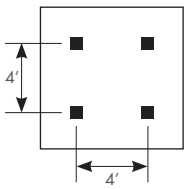

4′ x 4′ LAYOUT	CEILING HEIGHT						
Light levels at:	8′	10′	12′	14′	16′	18′	20′
Light levels on Work Plane (2.5′ AFF):	53	43	37	31	26	22	19
	(fc) foot candles						

5′ SPACING BETWEEN LIGHT FIXTURES

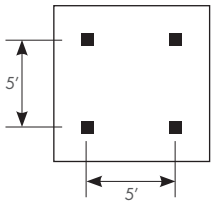

5′ x 5′ LAYOUT	CEILING HEIGHT						
Light levels at:	8′	10′	12′	14′	16′	18′	20′
Light levels on Work Plane (2.5′ AFF):	44	39	33	29	25	21	18
	(fc) foot candles						

6′ SPACING BETWEEN LIGHT FIXTURES

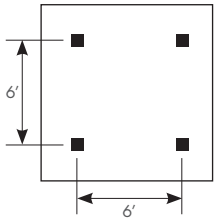

6′ x 6′ LAYOUT	CEILING HEIGHT						
Light levels at:	8′	10′	12′	14′	16′	18′	20′
Light levels on Work Plane (2.5′ AFF):	37	34	30	27	23	20	18
	(fc) foot candles						

8′ SPACING BETWEEN LIGHT FIXTURES

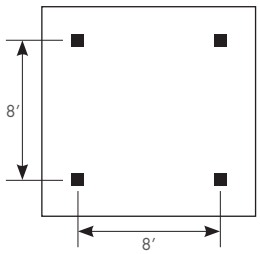

8′ x 8′ LAYOUT	CEILING HEIGHT						
Light levels at:	8′	10′	12′	14′	16′	18′	20′
Light levels on Work Plane (2.5′ AFF):	20	17	15	13	11	10	9
	(fc) foot candles						

Spacing Criteria = 1.32

Average light levels are provided in the tables above, for a range of lighting fixture layouts and ceiling heights. All illuminance values are reported in average footcandles (fc) and measured at the workplane, 30″ above the floor.

For approximate light level recommendations, please refer to the IES guidelines shown below:

Workshop / Tools / Crafts: 40-100 fc
Board Games / Cards: 20-40 fc
Dining: 5-10 fc
Kitchen: 30-50 fc
Computer: 15-30 fc
Media: 2-20 fc
Reading: 20-50 fc
Dressing: 10-30 fc
Corridors / Circulation: 3-5 fc

USAI® Lighting | SAVANT
www.savant.com
savantsupport@savant.com
1-877-SAVANT5
(1-877-728-2685)

©2019. USAI, LLC.
All rights reserved.
All designs protected by copyright.
Covered by US Patents. Patents pending.

Core 4.5″
Classic White Downlight

USAI® Lighting

Four Easy Steps to Specify

1 Select Housing Type

For Ceilings without Insulation

New Construction Housing (NC)

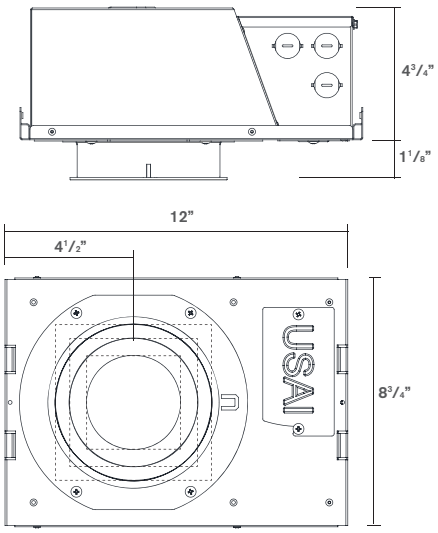

For Insulated Ceilings

IC Rated Housing (IC)
Rated for Direct Contact with Insulation

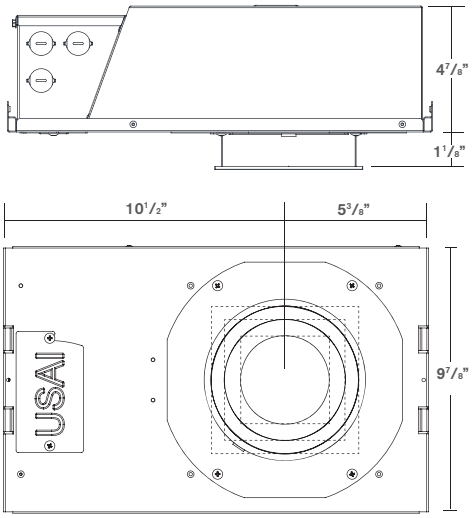

2 Select White Light

Warm White (C27)

2700 Kelvin
Similar to Incandescent

Neutral White (C30)

3000 Kelvin
Similar to Halogen

3 Select Dimming Control Type - Smooth Dimming to 1% Standard

0-10V Low Voltage Dimming (IV22A)

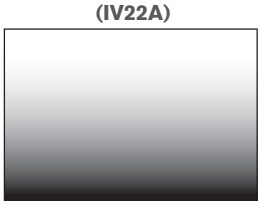

Compatible with 0-10V Controls

Phased Line Voltage Dimming (IP22A)

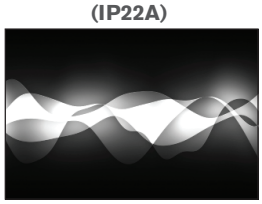

Compatible with Forward and Reverse Phase Dimmers

4 Select Shape

Trims are provided with flange, in white finish and a solite glass lens

Square

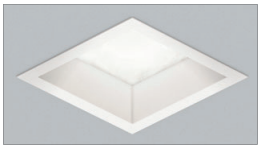

Round

See Next Page For How to Specify

USAI® Lighting | SAVANT
www.savant.com
savantsupport@savant.com
1-877-SAVANT5
(1-877-728-2685)

©2019. USAI, LLC.
All rights reserved.
All designs protected by copyright.
Covered by US Patents. Patents pending.

Core 4.5"
Classic White Downlight

USAI® Lighting

How to Specify

Manufacturer	Light Fixture Type			LED + Control		Options					Revision
USAI	4CR	D1					F	S	S	WH	00
USAI	**Family**	**Function**	**Housing Type**	**LED Color**	**Wattage Driver**	**Shape**	**Style**	**Beam Spread**	**Lens**	**Finish**	**Version**
USAI Lighting	**4CR** 4.5" Core Downlight, 22W	**D1** Fixed Downlight	**NC** New Construction Housing **IC** Insulation-Contact Rated Housing / Airtight	**C27** Warm White 2700K High 90+ CRI **C30** Neutral White 3000K High 90+ CRI	**IP22A** Integral Phase Dimming Driver, to 1% 120V only, 22W **IV22A** Integral 0-10V Dimming Driver, to 1% 120V-277V, 22W	**R** Round **S** Square	**F** Trimmed	**S** 100° Beam	**S** Solite Textured Glass	**WH** White	**00**

CORE 4.5 SPECIFICATIONS

FIELD REPLACEABLE LED LIGHT ENGINE
is serviceable through the aperture without tools. All USAI Lighting Classic White light engines feature industry leading color consistency within a 2-Step MacAdam's ellipse.

FIELD REPLACEABLE DRIVER
Driver complies with IEEEC62.41 surge protection. Multiple dimming driver options are available; some on-time delay may be experienced, depending on control system used.

HOUSING
Fabricated of black electrocoated 20 ga. steel with 18 ga. steel thru wire J-box, 4 in 4 out at min. 90°C, #12 AWG thru branch circuit wiring. IC-rated housings are rated for direct contact with insulation.

MOUNTING
Adjustable nailer bars with integral nails provided. Nailer bars are extendible from 14" to 24" centers.

CEILING CUT OUT
Round: 5-1/16" Ø
Square: 5-1/16" x 5-1/16"

LISTINGS
Dry/Damp/Wet location. NRTL/CSA-US tested to UL standards. IBEW union made.

NOTES
- Not for use in corrosive environment.
- Use of pressure washer voids warranty.

PHOTOMETRICS
Consult factory or website for IES files. Tested in accordance with IESNA LM79.

USAI® Lighting | SAVANT
www.savant.com
savantsupport@savant.com
1-877-SAVANT5
(1-877-728-2685)

©2019. USAI, LLC.
All rights reserved.
All designs protected by copyright.
Covered by US Patents. Patents pending.