SAVANT POWER STORAGE 50
PS50-12.5KW-100A-XX
GENERAL NOTES

1. CONCEPT ONLY: NOT FOR CONSTRUCTION OR PERMIT SUBMITTAL.
2. AS A BASIS FOR THE MINIMUM INSTALLATION CRITERIA, ENGINEER OF RECORD (EOR) IS TO ENSURE THAT ALL WORK MUST BE PERFORMED IN ACCORDANCE WITH THE LATEST EDITIONS OF THE STATE BUILDING CODE, STATE ELECTRICAL CODE, NFPA, ANSI/NECA INSTALLATION STANDARDS AND OTHER APPLICABLE CODES, REGULATIONS AND LAWS OF LOCAL, STATE AND FEDERAL GOVERNMENT, OTHER AUTHORITIES HAVING JURISDICTION AND APPLICABLE BASE BUILDING STANDARDS AND SPECIFICATIONS.
3. THESE DRAWINGS ILLUSTRATE A CONCEPT SHOWING MAJOR EQUIPMENT AND INTERCONNECTIONS BUT ARE NOT TO BE CONSIDERED FABRICATION / SITE SPECIFIC DRAWINGS. CABLE SIZING, SHORT CIRCUIT, GROUNDING, OVERCURRENT PROTECTION AND DISCONNECTING MEANS TO BE DESIGNED BY EOR WITH PE STAMPED SITE SPECIFIC CONTRACT DRAWINGS.
4. EOR TO ENSURE FINAL SYSTEM DESIGN ADHERES TO ALL APPLICABLE ARTICLES OF NEC INCLUDING ARTICLES 110, 240, 250, 310, 480, 690, 702, 705, 706 AND 750.
5. EOR SHALL REVIEW AND PROVIDE CALCULATIONS FOR ALL DOWNSTREAM LOADS FED BY THE PS50 INVERTER. ENSURE THAT THE COMBINATION OF ALL CONTINUOUS BASE LOAD & INRUSH SURGES CAUSED BY LINEAR AND NON-LINEAR LOADS ARE BELOW THE OVERLOAD SET POINT LIMITS OF THE INVERTER. CURRENT MAGNITUDE AND DURATION SHALL BE FACTORED INTO THE OVERALL DESIGN OF THE SYSTEM TO AVOID ANY NUISANCE TRIPPING. MITIGATION TECHNIQUES SUCH AS THE ADDITION OF SOFT-STARTS ON INDUCTIVE LOADS; RELOCATION OF LOADS TO NON-BACKED UP PANELS; OR GENERAL SYSTEM UPSIZING SHALL BE CONSIDERED.
6. EOR SHALL REVIEW AND PROVIDE CALCULATIONS FOR ALL DOWNSTREAM LOADS FED BY A GENERATOR WHEN CONNECTING TO THE PS50 SYSTEM IN AN OFF-GRID SITUATION. SIZE THE GENERATOR ACCORDING TO THE LATEST "SAVANT POWER STORAGE GENERATOR INSTALLATION AND ATS INTEGRATION GUIDE" FOUND IN THE "SAVANT POWER RESOURCE LINK" ON THIS SHEET.
7. FOR ALL PARALLEL INSTALLS, WHEN INSTALLING AC WIRE BETWEEN THE UPSTREAM BREAKERS IN THE GRID COMBINER PANEL (GCP) TO THEIR RESPECTIVE INVERTER GRID TERMINAL ON THE PS50, IT IS REQUIRED THAT THE WIRE LENGTH TO THE CLOSEST PS50 IS AT LEAST 65% THE WIRE LENGTH OF THE FURTHEST INSTALLED PS50 FROM THE GCP. THIS HELPS ENSURE THAT THE WIRE RESISTANCE DIFFERENCE IS KEPT TO A MINIMUM BETWEEN THE FURTHEST AND CLOSEST PS50. THE SAME IS REQUIRED FOR GENERATOR / AC COUPLED SOLAR APPLICATIONS USING A GENERATOR COMBINER PANEL FEEDING THE GEN TERMINALS ON PARALLEL PS50 UNITS.
8. DC SOLAR SHALL BE SUPPORTED IN UNLIMITED SOLAR SELL BACK; LIMITED SOLAR SELL BACK; AND NO SOLAR SELL BACK INTERCONNECTION AGREEMENTS.
9. AC SOLAR SHALL ONLY BE SUPPORTED IN UNLIMITED SOLAR SELL BACK INTERCONNECTION AGREEMENTS. IN OFF GRID SITUATIONS, FREQUENCY SHIFTING IS USED TO SHUT OFF AC SOLAR AT THE PS50 INVERTER GEN TERMINAL.
10. REFER TO POWER STORAGE 50 SPECIFICATIONS FOR ADDITIONAL INFORMATION.
11. REFER TO THE SAVANT POWER STORAGE 50 INSTALLATION GUIDE FOR ADDITIONAL INFORMATION SUCH AS MAINTENANCE SPACE REQUIREMENTS TO AID IN THE DESIGN OF YOUR PROJECT.

SAVANT POWER RESOURCE LINK

PLEASE USE THIS QR CODE TO GET TO ALL THE LATEST SPECIFICATION SHEETS, INSTALLATION GUIDES FOR THE SAVANT POWER SYSTEM.

PS50_GEN TO GEN_12_10_2025_V00_R00.DWG

INTER-DISCIPLINE REVIEW						
DISC	ARCH	CIVIL	ELECT	I&C	MECH	STRUCT
DATE	*	*	*	*	*	*
INIT	*	*	*	*	*	*

REV	REVISIONS	DATE	DRN	DSGN	CKD	APPD
00	VERSION 00	12-10-2025	MAW			

DSGN		
DRN	MAW	12-10-2025
CKD	JP	
SCALE:	AS NOTED	

-
-
-
CERTIFICATE OF REGISTRATION NO. X-0000

SAVANT POWER

RESIDENTIAL MICROGRID

PS50 GENERAL NOTES
GENERATOR TO GEN TERMINAL DESIGN

JOB NUMBER -

REV 00

DRAWING NUMBER 009-2639-00

LEGEND & ABBREVIATIONS	
(PBS)	PROVIDED BY SAVANT POWER, INSTALLED BY OTHERS
(EBO)	EQUIPMENT FURNISHED AND INSTALLED BY OTHERS
(XM)	EQUIPMENT EXISTING TO REMAIN
SPD	SURGE PROTECTION DEVICE
TYP	TYPICAL THROUGHOUT DRAWING
AF	SWITCH DISCONNECT FUSE RATING

KEYNOTE DRAWING NOTES	
1	CONSIDER USING A POLARIS TAP WITHIN THE ATS/MTS TO TAP THE INCOMING FEED. IF NO SPACE WITHIN THE ATS/MTS IS AVAILABLE, AN EXTERNAL JUNCTION BOX MAY BE USED.

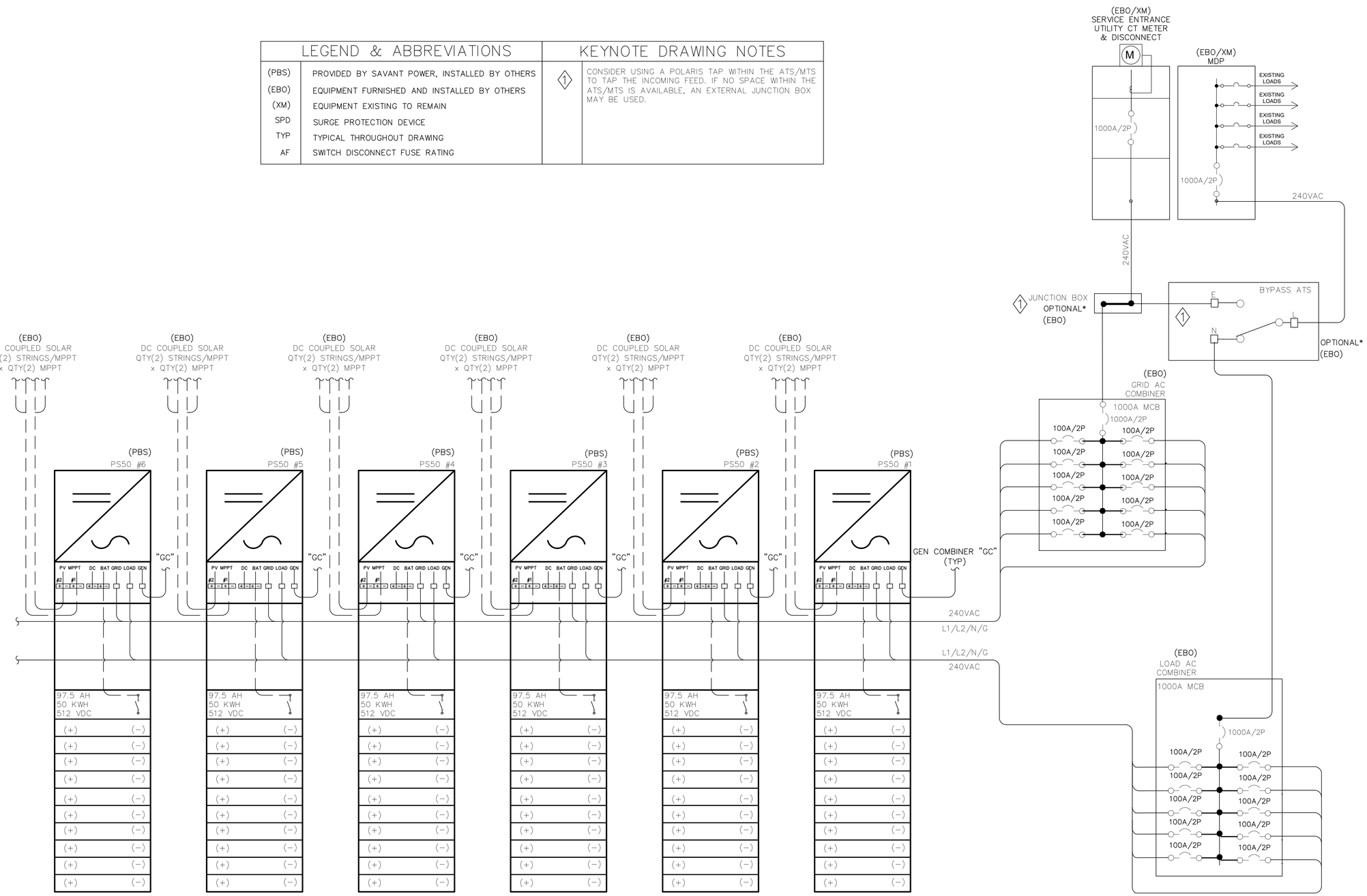

1000A POWER STORAGE 50 SYSTEM NOTES

1. 500KWH RATED ENERGY STORAGE
2. OFFGRID CONTINUOUS: 125KW / 520.83A
3. QTY (20) 8.5KW / 26A RATED PEAK DC COUPLED PV MPPT CHANNELS. 6.25KW MAX PV/MPPT POWER PER CHANNEL.
4. QTY (10) 24KW GEN INPUTS OR UP TO (10) 12.5KW AC COUPLED PV INPUTS
5. MAXIMUM AC+DC COUPLED SOLAR COMBINATION: 12.5KW / BATTERY STACK
6. 240KW / 1000A GRID PASS THROUGH
7. CHARGE RATE: 6.5KW / INVERTER
8. DISCHARGE RATE: 12.5KW / INVERTER

INTER-DISCIPLINE REVIEW						
DISC	ARCH	CIVIL	ELECT	I&C	MECH	STRUCT
DATE	*	*	*	*	*	*
INIT	*	*	*	*	*	*

REV	REVISIONS	DATE	DRN	DSGN	CKD	APPD
00	VERSION 00	12-10-2025	MAW			

DSGN		
DRN	MAW	12-10-2025
CKD	JP	
SCALE:	AS NOTED	

CERTIFICATE OF REGISTRATION NO. X-0000

SAVANT POWER

RESIDENTIAL MICROGRID

1000A: 125KW - 500KWH ESS
PS50 ONELINE DIAGRAM (120/240V)

JOB NUMBER: -

REV: 00

DRAWING NUMBER: 009-2603-00

PS50_GEN TO GEN_12_10_2025_V00_R00.DWG

GEN TERMINAL SOURCE OPTIONS

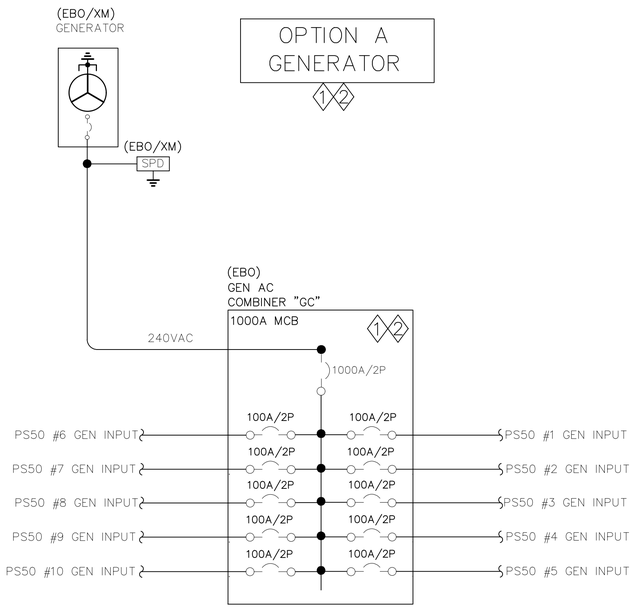

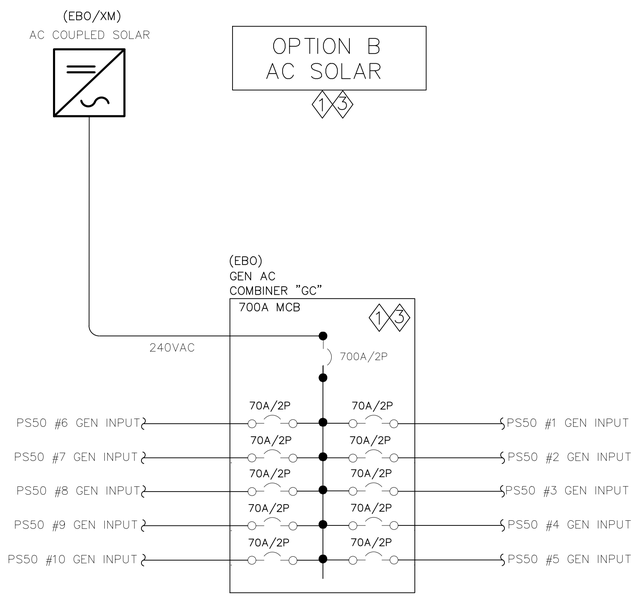

LEGEND & ABBREVIATIONS

(PBS)	PROVIDED BY SAVANT POWER, INSTALLED BY OTHERS
(EBO)	EQUIPMENT FURNISHED AND INSTALLED BY OTHERS
(XM)	EQUIPMENT EXISTING TO REMAIN
SPD	SURGE PROTECTION DEVICE
TYP	TYPICAL THROUGHOUT DRAWING
AF	SWITCH DISCONNECT FUSE RATING

KEYNOTE DRAWING NOTES

1	OCPD SIZING ON THIS CONCEPT DRAWING SHOWS THE MAXIMUM ALLOWABLE SIZE FOR THIS PS50 CONFIGURATION. ENGINEER OF RECORD TO SIZE OCPD AND CABLE SIZES ACCORDING TO SITE CONDITIONS AND LATEST NEC CODE. SEE GENERAL NOTES SHEET FOR ADDITIONAL DESIGN GUIDANCE.
2	QTY (1) PS50 GEN TERMINAL INPUT IS RATED UP TO 24KW PER INVERTER FOR GENERATOR PASS-THROUGH. GENERATOR POWER SHALL NOT BE LESS THAN THE POWER OF THE POTENTIAL HOUSE LOAD, PLUS THE SUM OF THE CHARGING POWER FOR ALL BATTERY STACKS.
3	QTY (1) PS50 GEN TERMINAL INPUT IS RATED UP TO 12.5KW AC SOLAR PER BATTERY STACK. OFF GRID FREQUENCY SHIFTING IS AN INCLUDED FUNCTION ON THE GEN TERMINAL TO TURN AC SOLAR FEEDS ON OR OFF.

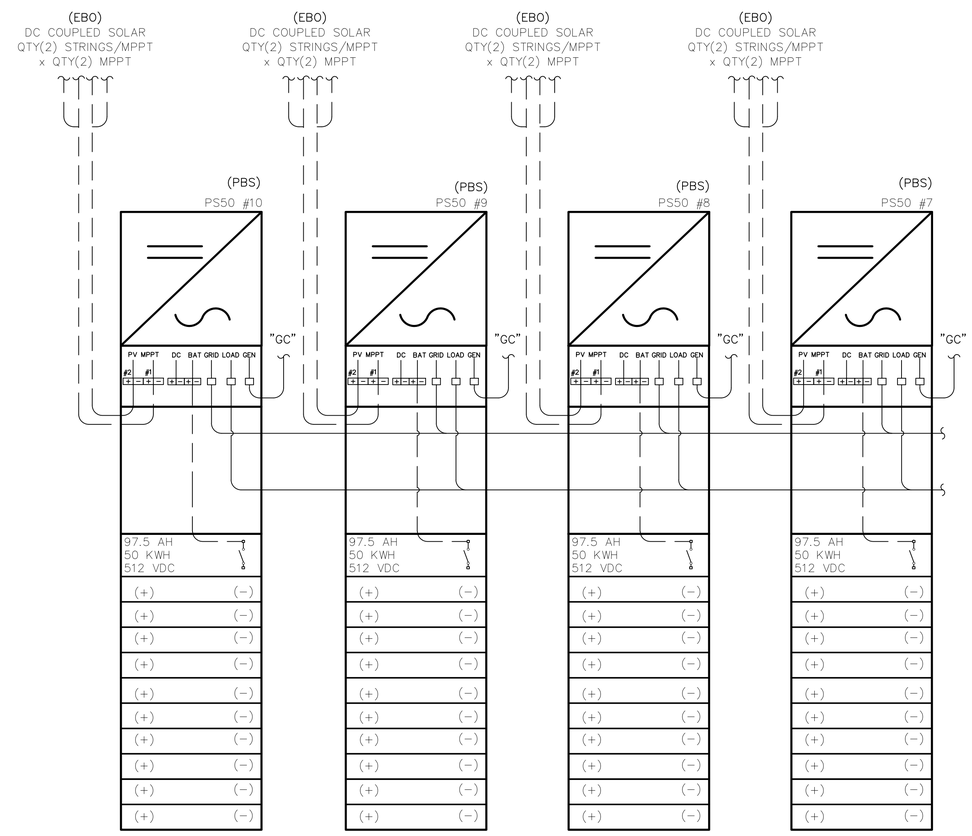

1000A POWER STORAGE 50 SYSTEM NOTES

1. 500KWH RATED ENERGY STORAGE
2. OFFGRID CONTINUOUS: 125KW / 520.83A
3. QTY (20) 8.5KW / 26A RATED PEAK DC COUPLED PV MPPT CHANNELS. 6.25KW MAX PV/MPPT POWER PER CHANNEL.
4. QTY (10) 24KW GEN INPUTS OR UP TO (10) 12.5KW AC COUPLED PV INPUTS
5. MAXIMUM AC+DC COUPLED SOLAR COMBINATION: 12.5KW / BATTERY STACK
6. 240KW / 1000A GRID PASS THROUGH
7. CHARGE RATE: 6.5KW / INVERTER
8. DISCHARGE RATE: 12.5KW / INVERTER

INTER-DISCIPLINE REVIEW						
DISC	ARCH	CIVIL	ELECT	I&C	MECH	STRUCT
DATE	*	*	*	*	*	*
INIT	*	*	*	*	*	*

REV	REVISIONS	DATE	DRN	DSGN	CKD	APPD
00	VERSION 00	12-10-2025	MAW			

DSGN		
DRN	MAW	12-10-2025
CKD	JP	
SCALE:	AS NOTED	

CERTIFICATE OF REGISTRATION NO. X-0000

SAVANT POWER

RESIDENTIAL MICROGRID

1000A: 125KW - 500KWH ESS
PS50 ONELINE DIAGRAM (120/240V)

JOB NUMBER -

REV 00

DRAWING NUMBER 009-2604-00

PS50_GEN TO GEN_12_10_2025_V00_R00.DWG